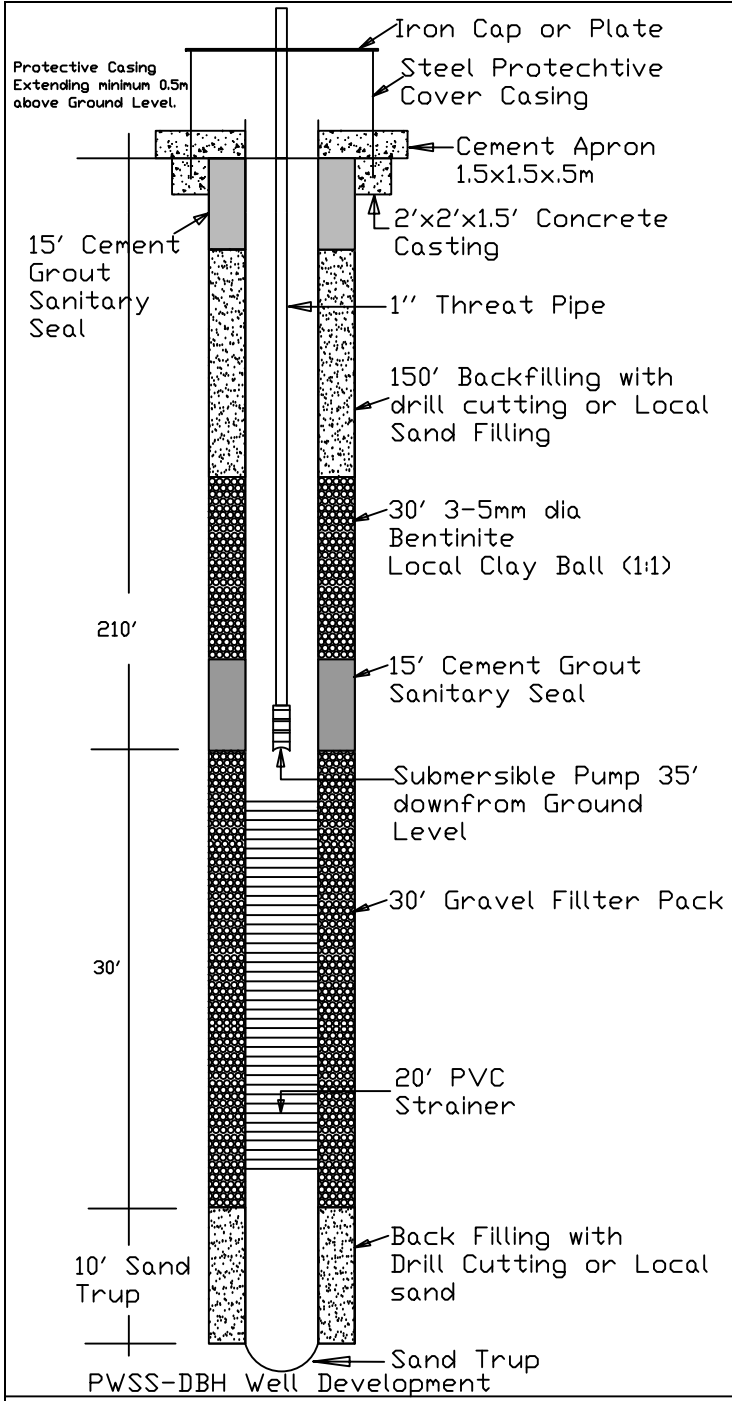

PWSS-DBH Well Development

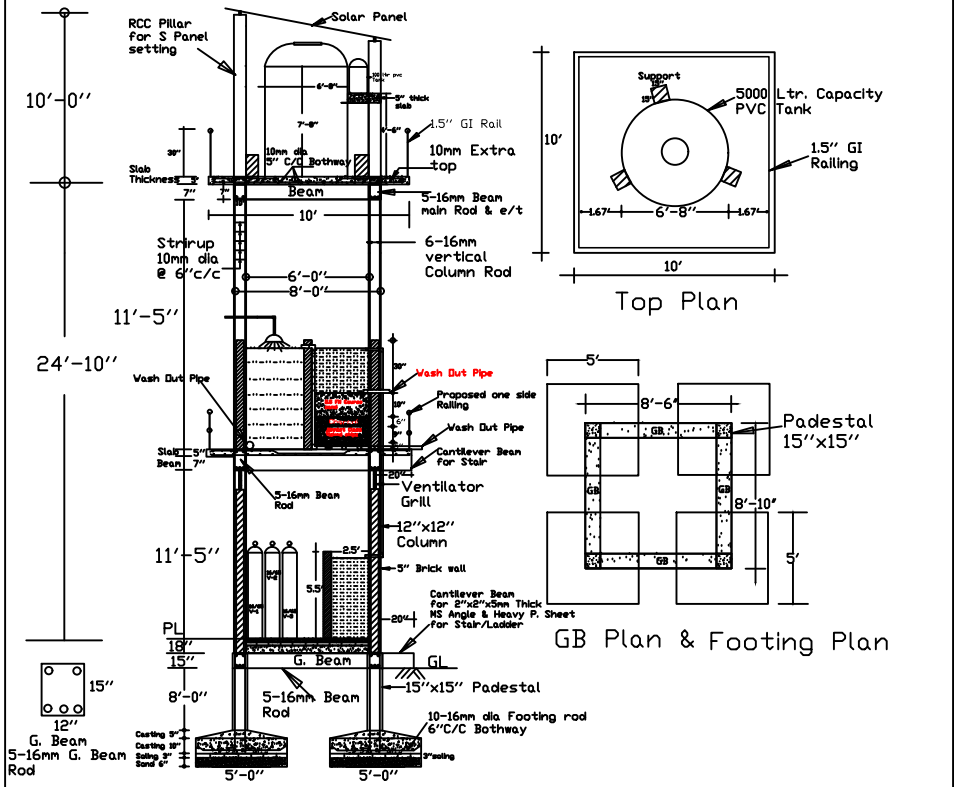

RCC Tower with Over Head Tank Design.

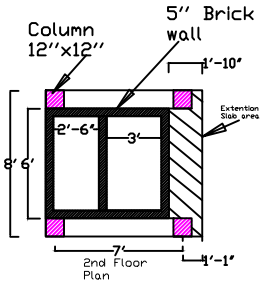

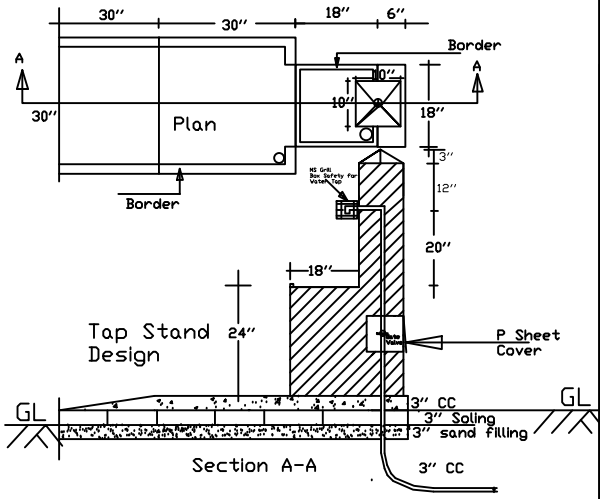

Project Title	Drown bY	Design bY	Project Location
PWSS-Deep Borhole to solar Pump NaricalBagen, kabakali Union,Dighinala.	Himangkar Chakma P. Engineer IAIWASH-Project TUS-Khagrachari	Md. Nasir Uddin WASH Coordinator-PHE IAIWASH Project Helvetas	